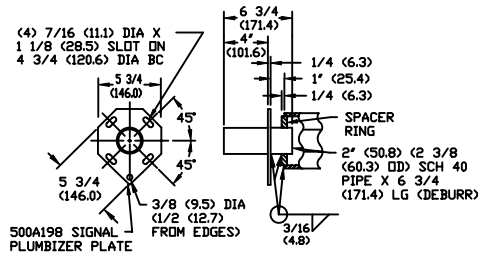

- DETAIL ⑤ MASTARM END SIGNAL SLIPFITTER-

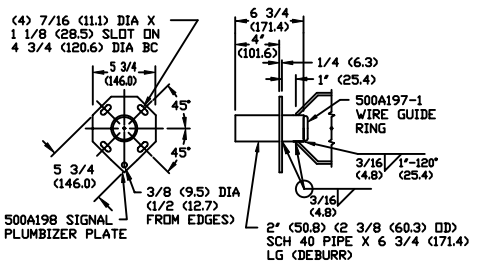

-DETAIL ⑥ OPTIONAL 500A154 MASTARM MID SIGNAL SLIPFITTER-

-DETAIL ③ LUMINAIRE EXTENSION ATTACHMENT-

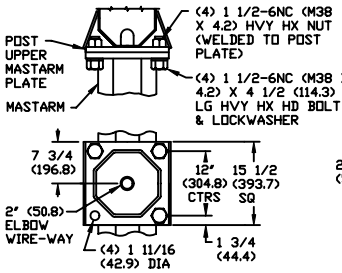

-DETAIL ① UPPER MASTARM ATTACHMENT-

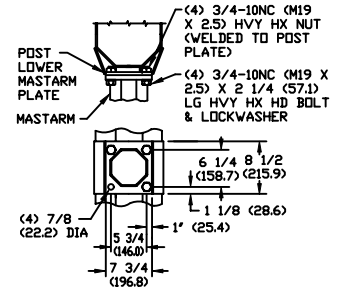

-DETAIL ② LOWER MASTARM ATTACHMENT-

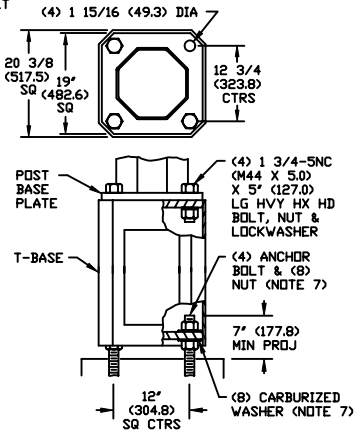

-DETAIL ④ T-BASE & POST ATTACHMENT-

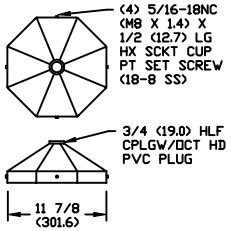

-DETAIL 590A17 CAP-

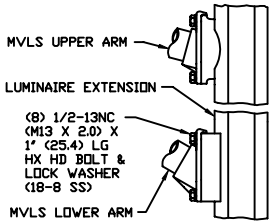

-DETAIL ⑦ MVLS MASTARM ATTACHMENT-

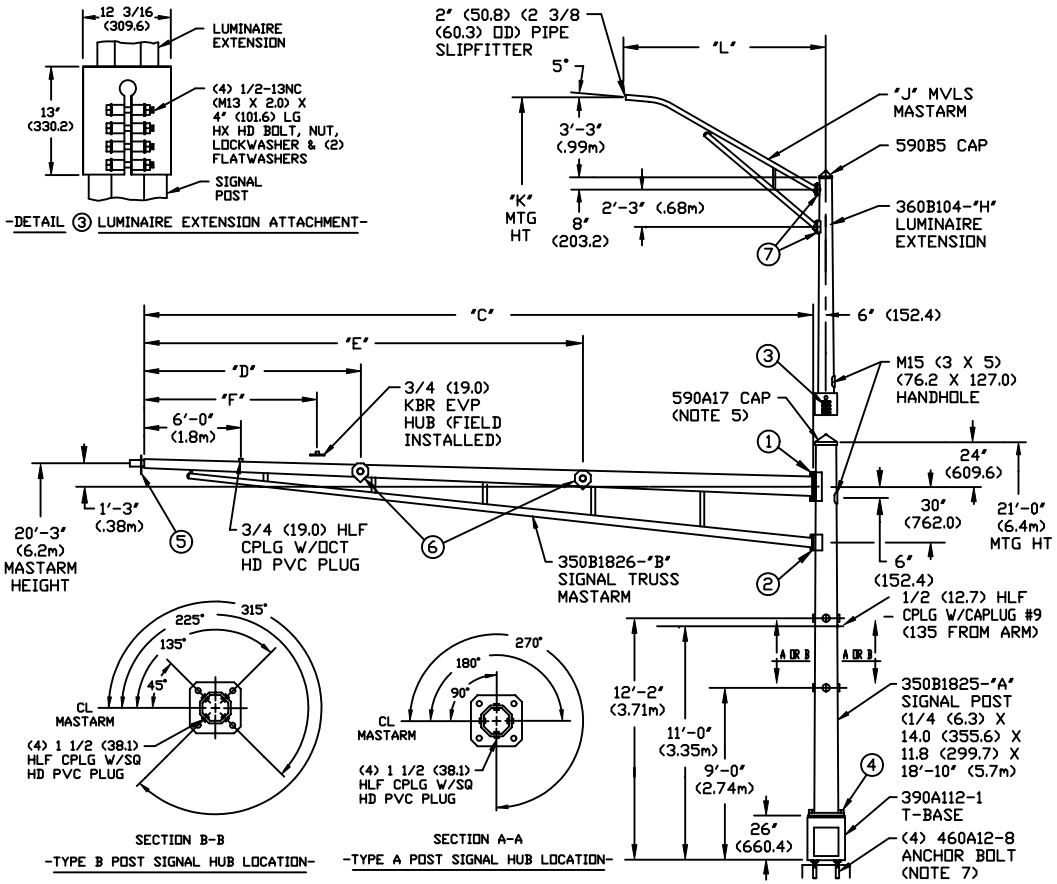

-TYPE B POST SIGNAL HUB LOCATION-

-TYPE A POST SIGNAL HUB LOCATION-

DASH NO	QTY	POLE NO	MN/DOT TYPE PA90	POST "A"	MASTARM					LUMINAIRE EXTENSION				MILLERBERND PART NO
					"B"	"C"	"D"	"E"	"F"	"H"	"J"	"K"	"L"	

NOTE :

1. MATERIAL- HIGH STRENGTH LOW ALLOY STEEL 50,000 PSI (334738 kPa) MIN YIELD PER ASTM A588 OR A606 (A572 OR A607 FOR MASTARM & EXTENSION)
2. FINISH- PRIME PAINT (INTERIOR & EXTERIOR) & FINISH PAINT EXTERIOR OF MASTARM & LUMINAIRE EXTENSION ALUM/GRAY, VERTICAL POST FEDERAL YELLOW & T-BASE DARK GREEN
3. POST, MASTARM & LUMINAIRE EXTENSION TO BE OCTAGONAL TUBE FABRICATED WITH ONE SUBMERGED ARC LONGITUDINAL SEAM WELD. POST- 100% PENETRATION, REMAINDER- 70% PENETRATION. GAS METAL ARC WELDING PROCESS MAY BE USED FOR REMAINDER OF WELDED FABRICATION, WELDING PARAMETERS TO BE APPROVED BY THE ENGINEER. WITH THE PRECEDING EXCEPTIONS MN/DOT SPEC 24713J SHALL APPLY.
4. THE VERTICAL SHAFT SHALL HAVE "PA90" STAMPED AT APPROX. 6'-0" (1.8m) FROM THE TRANSFORMER BASE, 0 DEG TO ARM. THE POLE TYPE SHALL BE CLEARLY LEGIBLE AFTER PAINTING.
5. WHEN A LUMINAIRE EXTENSION IS NOT USED A 590A17 REMOVABLE CAP IS SUPPLIED.
6. HEX HEAD BOLTS & NUTS (UNLESS SPECIFIED) ASTM A325 GALV A153 FOR SIZS 1/4 (6.3) THRU 1 1/2 (38.1) DIA & ASTM A354BC GALV A153 FOR SIZES OVER 1 1/2 (38.1) DIA
7. ANCHOR BOLTS- (4) 2" (50.8) DIA X 96" (2438.4) LG WITH (2) HVY HX NUTS & (2) CARBURIZED WASHERS ON 17" (431.8) DIA BC PER 460A12-8 (CAGE PER 460B36-1)
8. EXCEPT AS NOTED MAT'L & WORKMANSHIP PER CURRENT MN/DOT SPECS

DWN:	BAMST-203/MVLS (MN/DOT PA90) TRAFFIC SIGNAL STANDARD
DATE:	
CHK:	Millerbernd MANUFACTURING CO. WINSTED, MN
SCALE: NTS	