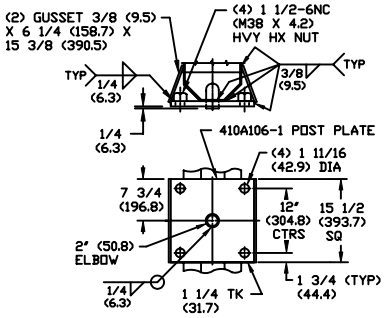

-DETAIL ① POST UPPER MASTARM MTG PLATE-

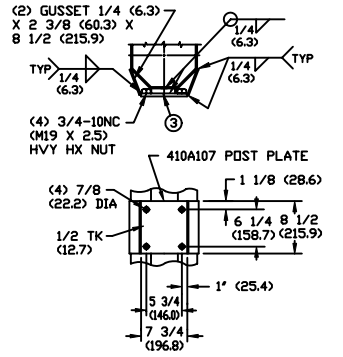

-DETAIL ② POST LOWER MASTARM MTG PLATE-

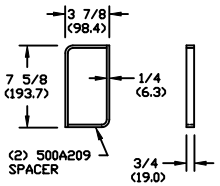

-DETAIL ③ SPACER-

DASH NO POST DESIGNATION & TYPE SIGNAL HUB LOCATION	QTY	"A" SHAFT TK	"B" SHAFT BOTTOM DAC	"C" OCTAGON CUTOUT	"D" BASE PLATE 410A52-	"E" BOLT SIZE	"F" BOLT LENGTH	"G" POLE TYPE	"H" LOCK WASHER SIZE	"J" HOLE SIZE
EA		3/16 (4.8)	13.0 (330.2)	12 3/16 (309.6)	14	1 1/2-6NC (M38 X 4.2)	4 1/2 (114.3)	PA85	1 1/2 (38.1)	1 11/16 (42.9)
EB										
BA		1/4 (6.3)	14.0 (355.6)	13 3/16 (335.0)	9	1 3/4-5NC (M44 X 5.0)	5" (127.0)	PA90	1 3/4 (44.4)	1 15/16 (49.3)
BB										
DA		5/16 (7.9)	14.0 (355.6)	13 3/16 (335.0)	9	1 3/4-5NC (M44 X 5.0)	5" (127.0)	PA100	1 3/4 (44.4)	1 15/16 (49.3)
DB										

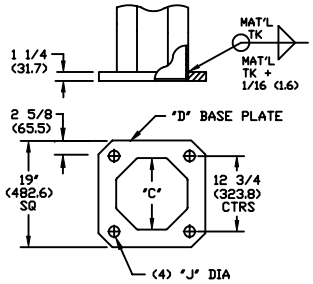

-DETAIL ④ POST BASE PLATE-

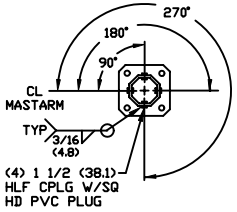

SECTION A-A

-TYPE A POST SIGNAL HUB LOCATION-

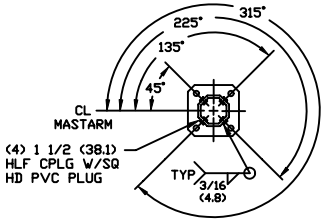

SECTION B-B

-TYPE B POST SIGNAL HUB LOCATION-

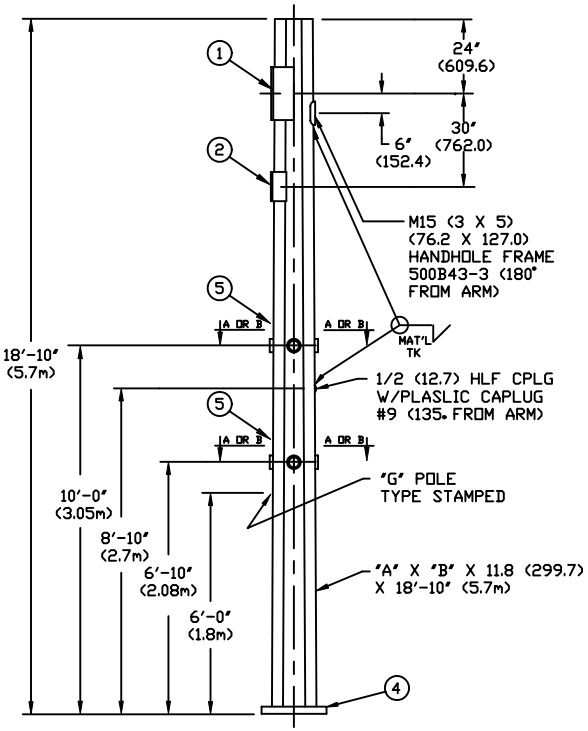

NOTE :

1. MATERIAL- HIGH STRENGTH LOW ALLOY STEEL 50,000 PSI (334738 kPa) MIN YIELD PER ASTM A588 OR A606
2. FINISH- TO MATCH THE FINISH LISTED ON THE TRAFFIC SIGNAL STANDARD DRAWING
3. POST TO BE OCTAGONAL TUBE FABRICATED WITH ONE SUBMERGED ARC LONGITUDINAL SEAM WELD WITH 100% PENETRATION. GAS METAL ARC WELDING PROCESS WITH 70% PENETRATION MAY BE USED FOR REMAINDER OF WELDED FABRICATION, WELDING PARAMETERS TO BE APPROVED BY THE ENGINEER. WITH THE PRECEDING EXCEPTIONS MN/DOT SPEC 24713J SHALL APPLY.
4. EXCEPT AS NOTED MAT'L & WORKMANSHIP PER CURRENT MN/DOT SPECS
5. THE VERTICAL SHAFT SHALL HAVE THE POLE TYPE "G" STAMPED AT APPROX. 6'-0" (1.8m) FROM THE BASE PLATE, 0 DEG TO ARM, THE POLE TYPE SHALL BE CLEARLY LEGIBLE AFTER PAINTING.
6. HEX HEAD BOLTS & NUTS (UNLESS SPECIFIED) ASTM A325 GALV A153 FOR 1/4 (6.3) THRU 1 1/2 (38.1) DIA & ASTM A354BC FOR SIZES OVER 1 1/2 (38.1) DIA
7. COIL & PLATE SIZES FOR TAPERED OCTAGON TUBES:
   3/16 (4.8) X 13.0 (330.2) (39 1/4 996.9) X 11.8 (299.7)
   (35 9/16 903.2) = 74 13/16 (1900.2) COIL
   1/4 (6.3) X 14.0 (355.6) (42" 1066.8) X 11.8 (299.7)
   (35 3/8 898.5) = 77 3/8 (1965.3) PLATE
   5/16 (7.9) X 14.0 (355.6) (41 7/8 1063.6)) X 11.8 (299.7)
   (35 1/8 892.2) = 77" (1955.8) PLATE
8. FOR REFERANCE ONLY WHEN ORDERING A COMPLETE TRUSS MASTARM POST ASSY SEPARATELY THE FOLLOWING PARTS WILL BE INCLUDED: (1) 500B43-1 HANDHOLE COVER, (1) 500B43-2 HANDHOLE LATCH, (1) 5/16-18NC (M8 X 1.4) X 2" (50.8) LG HX SCKT FL HD SCREW (18-8 SS), (4) "E" X "F" LG HVY HX HD BOLT, (4) "E" HVY HX NUT & (4) "H" LOCKWASHER

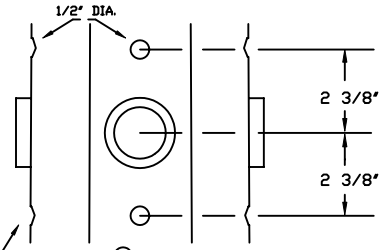

-DETAIL ⑤ SIGNAL HUBS-

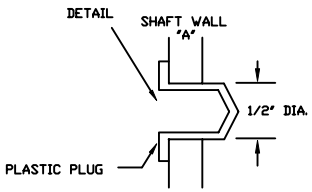

-LOCKING DIMPLE-

APROX .VERTICAL POLE SCALE .0229 = 1'

REV 8-21-97 CHG TO PVC PLUGS
REV 6-20-97 1/2 (12.6) HLF CPLG TO 135 DEG

DWN: FLOYD F.	SIGNAL TRUSS MASTARM POST MS-203 (11.8 (299.7) DAC)	
DATE: 11-11-96		
CHK: WADE L.	Millerbernd MANUFACTURING CO. WINSTED, MN	350B1825
SCALE: NTS		