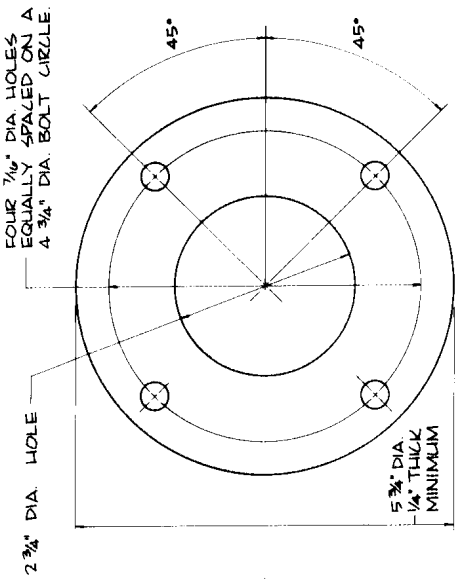

FLANGE DETAIL
2" CLAMP TYPE ADAPTER

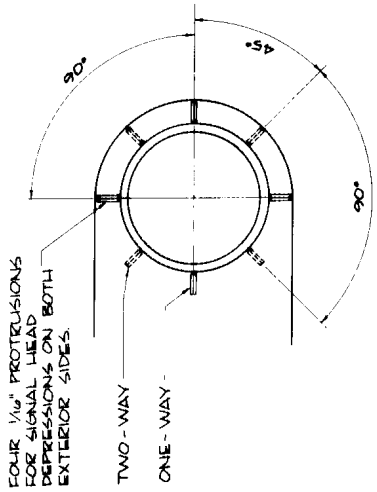

DETAIL "A"

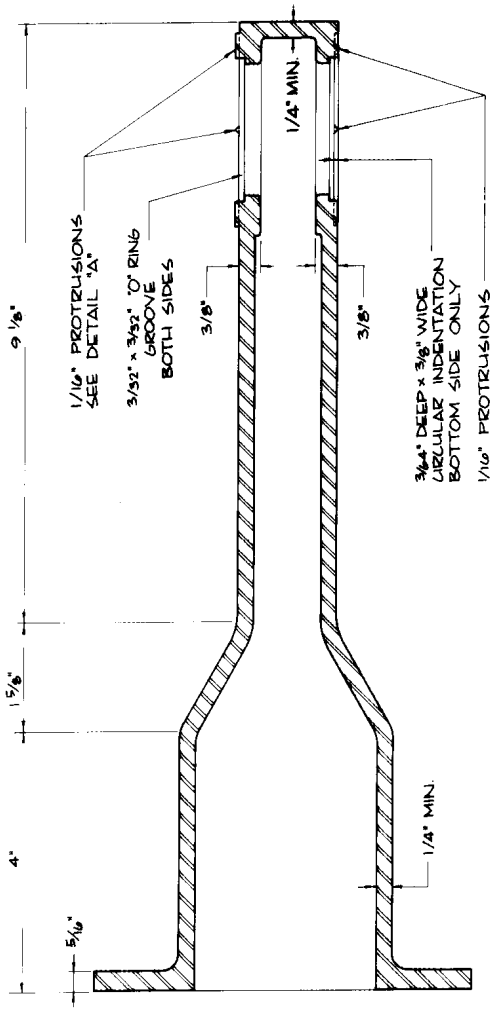

SECTION THROUGH ONE-WAY MOUNT

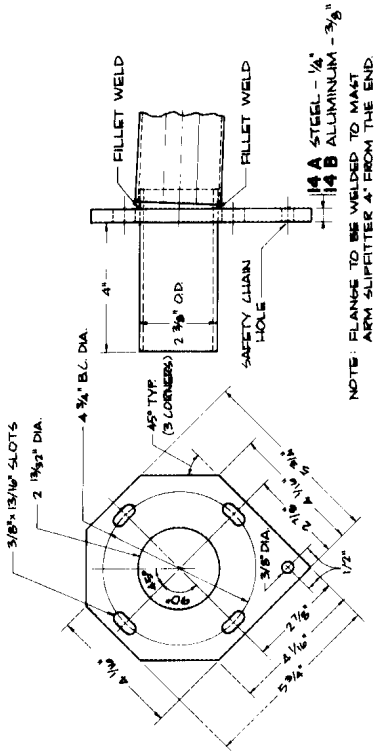

FLANGE DETAIL
2" WELDED TYPE ADAPTER

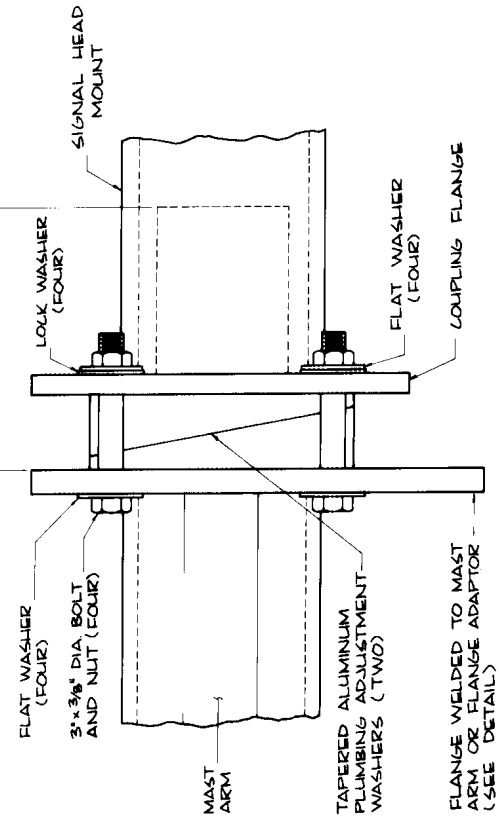

ASSEMBLY DETAIL

SIGNAL MOUNT DETAILS

DATE		DWG NO.	REV
5-01	Frey Manufacturing Corporation 13150 STEWART AVE., NORWOOD, MN 55368-9675 VOICE/FAX 952-467-4402	3	